NOTES:

1. ALL DIMENSIONS ARE TO INTERNAL GEOMETRY OF CASE.
2. CONTAINER SIDES ARE AT A 2° DRAFT.
3. TOLERANCES UNSPECIFIED.

REVISION HISTORY					
ZONE	REV	E.C.O.	DESCRIPTION	BY/DATE	APPROVED/DATE

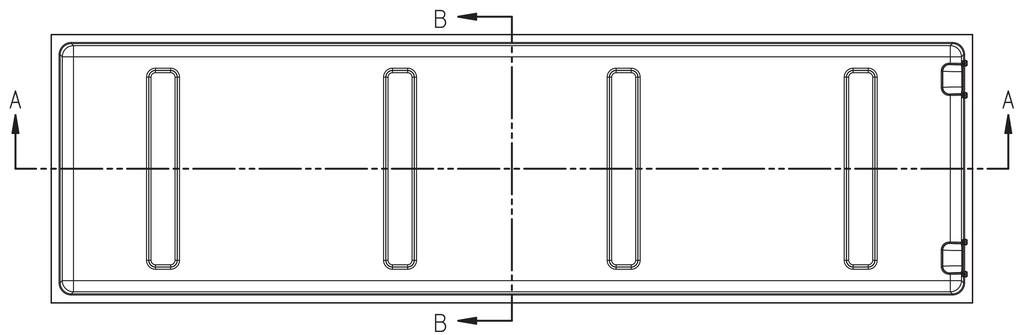

TOP VIEW
1:4

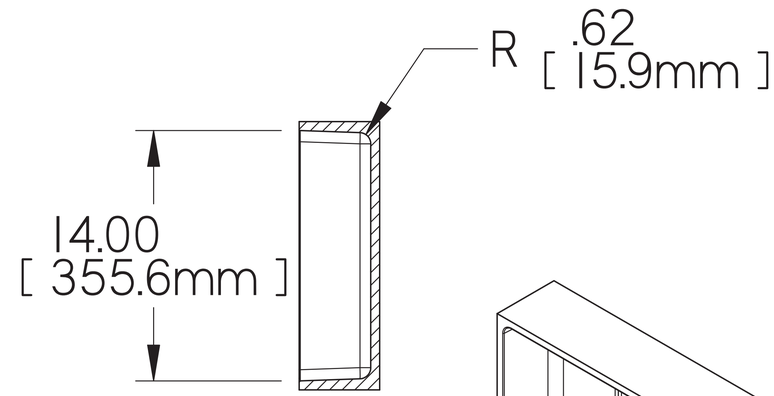

SECTION B-B

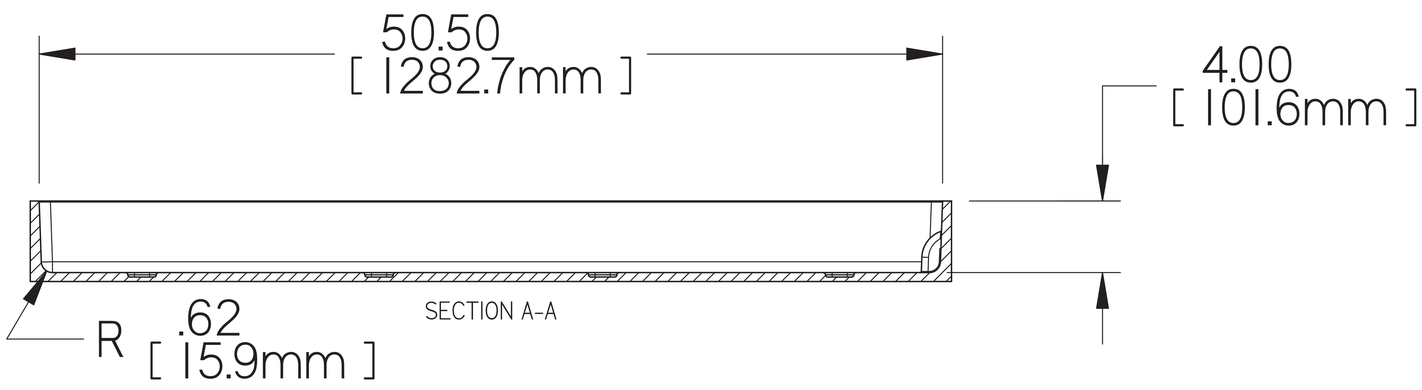

SECTION A-A

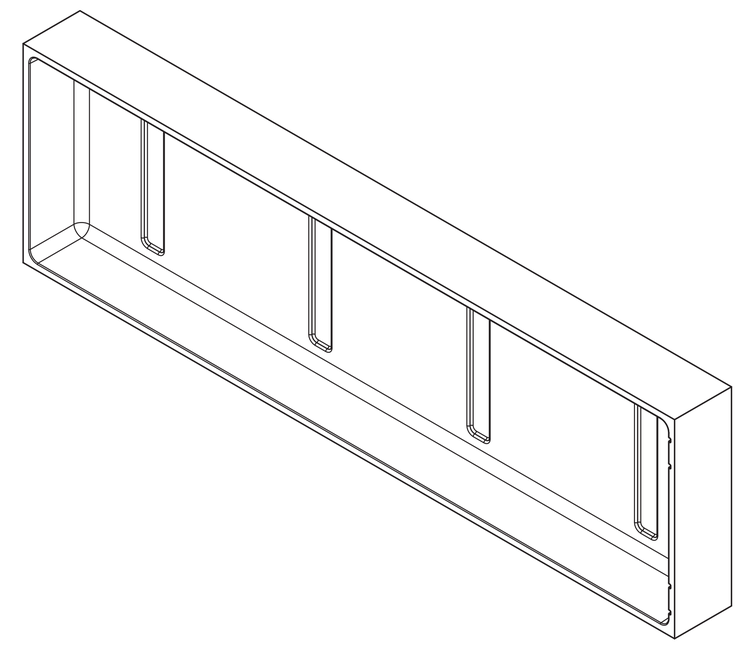

ISO VIEW

-
-

COMPUTER CONTROLLED DOCUMENT
MANUAL CHANGES NOT ALLOWED

NEXT ASSY. FINAL			SCALE 1/4
TOLERANCE UNLESS OTHERWISE SPECIFIED	± .XX -.-	± .XXX -.--	ANGLE ± -°
DR. D. SPRAGUE DATE 10-05-18	ENGR. D. SPRAGUE DATE 10-05-12		
CHKD. DATE	APVD. DATE		

This drawing and all copies and the design and data shown are the property of PELI PRODUCTS, S.L.U. and include proprietary information. The borrower by receipt or retention of the drawing agrees that, except as expressly authorized in writing by PELI PRODUCTS, S.L.U. it will (1) not use the drawing or any copy of the design or data shown (2) not reproduce, copy, excerpt, exhibit or distribute the drawing or any copy for use by others and (3) upon demand return the drawing, all copies and all material copies therefrom.

PELI PRODUCTS, S.L.U.
PELI STORM CASE
C/ Provença, 388 Planta 7, 08025 Barcelona, Spain

TITLE: IM3300 CASE BASE INTERNAL GEOMETRY

SIZE	CAGE CODE	DWG NO.	REV
D		IM3300-B	-
PROJ. NO.	N/A	SHEET 1 OF 1	

DWG NO IM3300-B SH 1 OF 1 REV -

© Pelicase Sw 2009/05